SCS

SCS series centrifugal pump

cast iron

Motor housing: aluminum
Shaft: 45# steel /stainless steel

Applications and installation

SCS series centrifugal pumps with single impeller are able to offer high flow rates, provide smooth, nonpulsating delivery, and regulate the flow rate over a wide range without damaging the pump.

For correct functioning of the pump, use clean water or non-aggresive liquids charged with small solid impurities.

To be used in flow irrigation system in gardening, agriculture and industrial fittings.

Pumps should be installed in a covered area, protected against the weather.

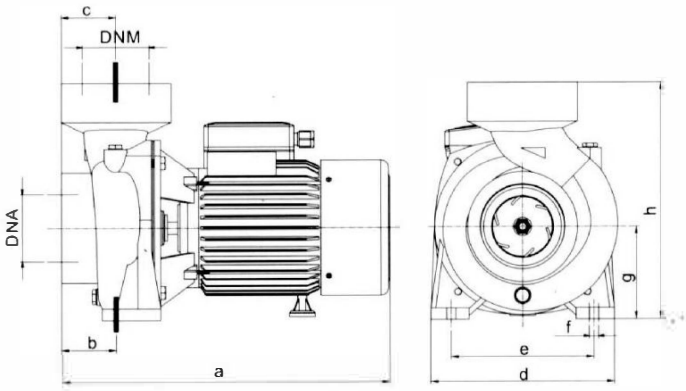

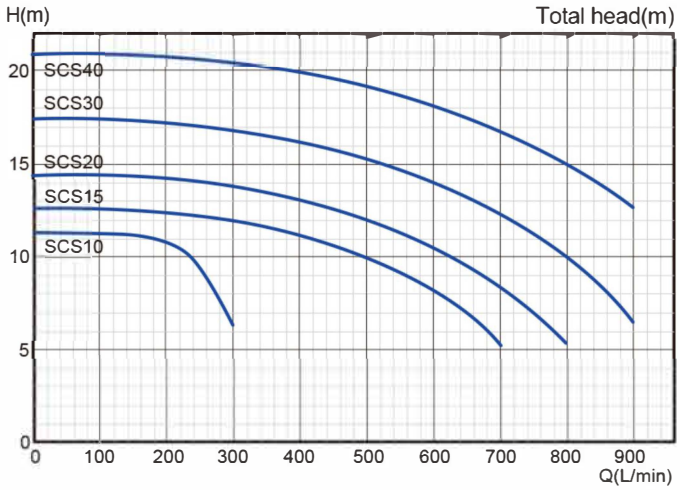

Construction features

Pump body: cast iron

Motor housing: Aluminum

Shaft: 45#steel/stainless steel

Impeller: brass

Motor: closed, externally ventilated

Insulation class: B/F

Protection class: IP44/IP54

Duty: continuously rated

Mechanical seal: ceramic steatite/metalized carbon

Operating limitations

Max.ambient temperature up to 40℃

Max fluid temperature up to 80℃

Max pressure up to 10 bar

SCS

Model	HP	kW	DNA/DNM	Suct.Max m	Q.Max L/min	H.Max m	Q. L/min	0	100	200	300	400	500	600	700	800	900	Weight Kg
SCS10	1	0.75	2" / 2"	9	300	12.5	H(m)	12.5	12.5	12	7.5							16.5
SCS15	1.5	1.1	2" / 2"	9	700	13		13	13	13	12.5	11	10	8.5	6			25
SCS20	2	1.5	2" / 2"	9	800	14		14	14	14	13.7	13	12	10	7.5	6		26
SCS30	3	2.2	3" / 3"	9	900	17.5		17.5	17.5	17.2	17	16.5	15.5	14.2	13	10.5	6.5	32
SCS40	4	3	3" / 3"	9	900	21		21	21	21	20.5	20	19	18	17.2	15.5	13	36

Overall and mounting dimension
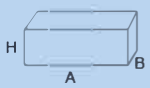
Model	Dimensions (mm)								Package Dimension		
	DNA	DNM	L1	W1	H1	L2	W2	f	A	B	H
SCS10	2"	2"	318	180	248	55	115	97	340	210	265
SCS15	2"	2"	390	220	286	56.5	140	114	410	235	305
SCS20	2"	2"	390	220	286	56.5	140	114	410	255	320
SCS30	3"	3"	445	227	298	80.5	140	116	465	280	345
SCS40	3"	3"	458	230	300	80.5	140	116	480	280	350